Rev No.	Description of Revision	Date	Name	Approved	ECN No.
1	Transfer of SMD Position (DIP)	07.07.25	Lee		

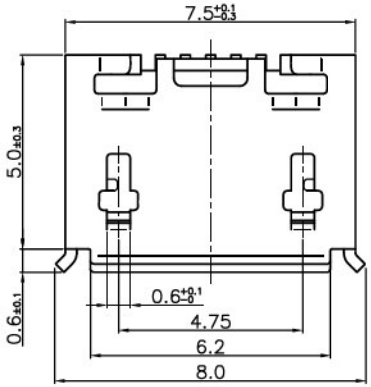

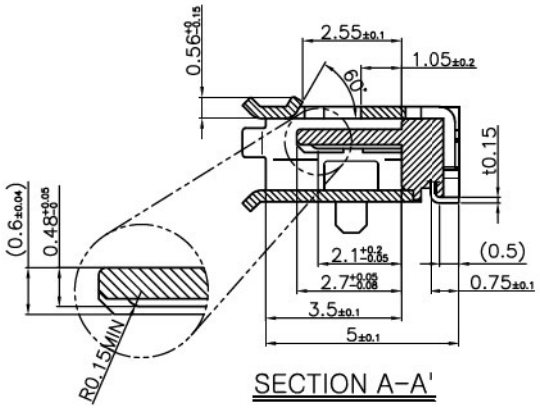

SECTION A-A'

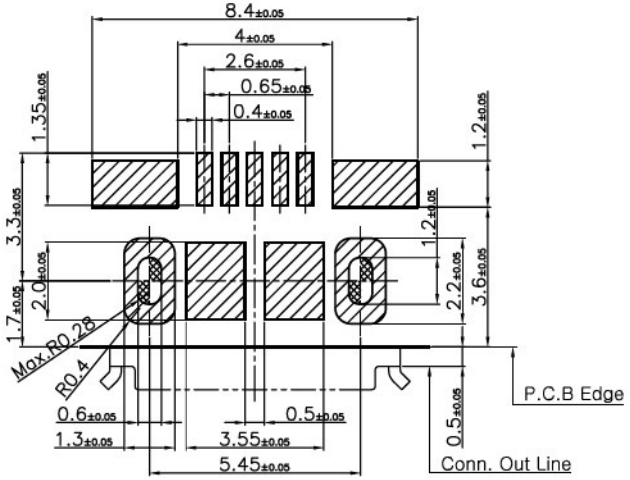

P.C.B LAYOUT

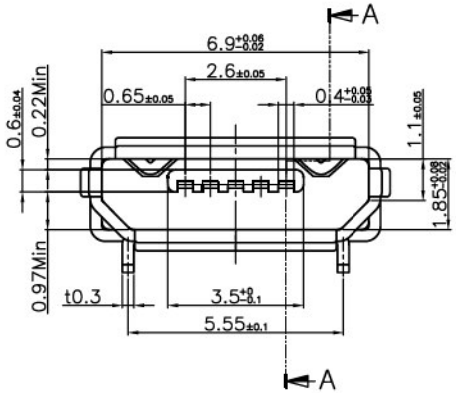

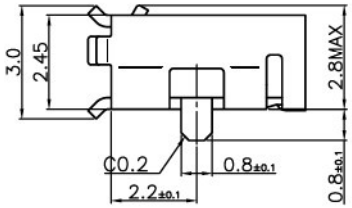

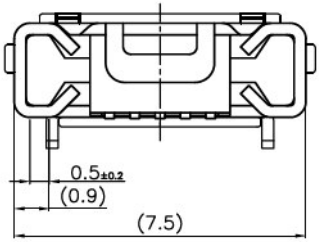

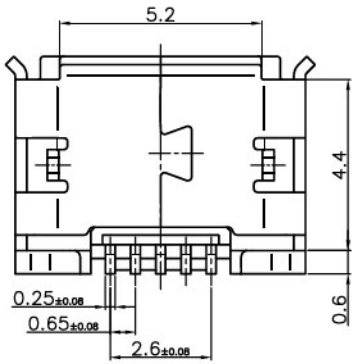

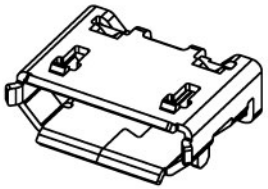

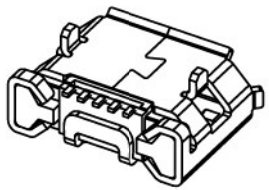

※ Specifications
1. Voltage Rating : 30VAC/DC
2. Current Rating : 1.0A/Pin
3. Operating temperature : -30℃~+80℃
4. Durability : 10,000 cycles

※ NOTE
1. PLATING
1) CONTACT
- Contact Area : Au 0.75㎛ Min over Ni 2.0 Min
- Lead Area : Au 0.05㎛ Min over Ni 0.2 Min
2) METAL COVER : Ni 1.0 Min
2. COPLANARITY : 0.08 MAX

No	Descriptions	Material	Finish	Remarks
3	METAL COVER	Stainless Steel	Note. 1	
2	CONTACT	Copper Alloy	Note. 1	
1	HOUSING	Thermo Plastic	Black Color	UL94V-0

General Tolerance	
Dimension	mm (°)
X	± 0.2
X.X	± 0.1
X.XX	± 0.05
X.XXX	± 0.01
ANGLE	± 1°

Scale: N/S | Units: mm | Sheet: 1 of 1
Date: 2007. 02. 10
Drawn: M. Y. LEE | Design | Checked | Reviewed | Approved

HJ&C HYUP JIN I&C CO., LTD.

TITLE: HI05-AG0250 Micro-USB Socket (B)
Customer Drawing
SW No.
DWG No. HI05-AG0250-A1
Rev. 1

무단 복사 복제 금지 ★ 出圖 2008.02.01 유효 ★ HYUP JIN I&C CO., LTD.